Pioneer

Service Manual

ORDER NO.
PET99001

POWERED SUBWOOFER

HTP702-SW

HTP202/302-SW

THIS MANUAL IS APPLICABLE TO THE FOLLOWING MODELS.

Type	Model		Power Requirement	Remarks
	HTP702-SW	HTP202/302-SW		
	O	O	AC120V	

CONTENTS

1. SAFETY INFORMATION 2
2. DISASSEMBLY 3
3. PACKING, EXPLODED VIEWS AND PARTS LIST 3
4. SCHEMATIC AND PCB CONNECTION DIAGRAMS .. 6
5. PCB PARTS LIST 8
6. PANEL FACILITIES 9
7. SPECIFICATIONS 10

PIONEER ELECTRONIC CORPORATION 4-1, Meguro 1-Chome, Meguro-ku, Tokyo 153-8655, Japan
PIONEER ELECTRONICS SERVICE, INC. P.O.Box 1760, Long Beach, CA 90801-1760, U.S.A.

© PIONEER ELECTRONIC CORPORATION 1999

1. SAFETY INFORMATION

This service manual is intended for qualified service technicians; it is not meant for the casual do-it-yourselfer. Qualified technicians have the necessary test equipment and tools, and have been trained to properly and safely repair complex products such as those covered by this manual.
Improperly preformed repairs can adversely affect the safety and reliability of the product and may void the warranty. If you are not a qualified to perform the repair of this product properly and safely, you should not risk trying to do so and refer the repair to a qualified service technician.

WARNING
Lead in solder used in this product is listed by the California Health and Welfare agency as a known reproductive toxicant which may cause birth defects or other reproductive harm (California Health & Safety Code, Section 25249.5). When servicing or handling circuit boards and other components which contain lead in solder, avoid unprotected skin contact with the solder. Also, when soldering do not inhale any smoke or fumes produced.

NOTICE
(FOR CANADIAN MODEL ONLY)
Fuse symbols (fast operating fuse) and/or (slow operating fuse) on PCB indicate that replacement parts must be of identical designation.

REMARQUE
(POUR MODÈLE CANADIEN SEULEMENT)
Les symboles de fusible (fusible de type rapide) et/ou (fusible de type lent) sur CCI indiquent que les pièces de remplacement doivent avoir la même désignation.

(FOR USA MODEL ONLY)

1. SAFETY PRECAUTIONS
The following check should be performed for the continued protection of the customer and service technician.

LEAKAGE CURRENT CHECK
Measure leakage current to a know earth ground (water pipe, conduit, etc.) by connecting a leakage current tester such as Simpson Model 229-2 or equivalent between the earth ground and all exposed metal parts of the appliance (input/output terminals, screwheads, metal overlays, control shaft, etc.). Plug the AC line cord of the appliance directly into a 120V AC 60Hz outlet and turn the AC power switch on. Any current measured must no exceed 0.5mA.

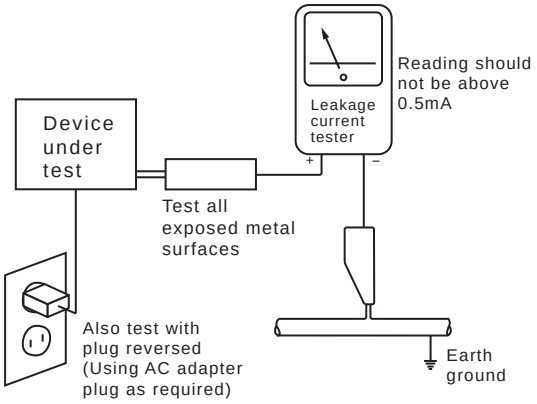

AC Leakage Test

ANY MEASUREMENT NOT WITHIN THE LIMITS OUTLINED ABOVE ARE INDICATIVE OF A POTENTIAL SHOCK HAZARD AND MUST BE CORRECTED BEFORE RERTURNING THE APPLIANCE TO THE CUSTOMER.

2. PRODUCT SAFETY NOTICE
Many electrical and mechanical parts in the appliance have special safety related characteristic. These are often not evident from visual inspection nor the protection afforded by them necessarily can be obtained by using replacement components rated for voltage, wattage, etc. Replacement parts which have these special safety characteristics are identified in this Service Manual.

Electrical components having such features are identified by marking with a D on the schematics and on the parts list in this Service Manual.

The use of a substitute replacement component which dose not have the same safety characteristics as the PIONEER recommended replacement one, shown in the parts list in this Service Manual, may create sock, fire, or other hazards.

Product Safety is continuously under review and new instructions are issued from time to time. For the latest information, always consult the current PIONEER Service Manual. A subscription to, or additional copies of, PIONEER Service Manual may be obtained at a nominal charge from PIONEER.

2. DISASSEMBLY

• POWER AMP SECTION
• Remove the 8 screws from the power amplifier.
• Remove the polyswitch assembly.
• Remove the connector lead, etc.

• PLASTIC FOOT SECTION
• Remove each of the 4 screws.

• SPEAKER
• Remove each of the 4 screws.

3. PACKING, EXPLODED VIEWS AND PARTS LIST

NOTES:
- *Parts marked by "NSP" are generally unavailable because they are not in our Master Spare Parts List.*
- *The ⚠ mark found on some component parts indicates the importance of the safety factor of the part. Therefore, when replacing, be sure to use parts of identical designation.*
- *Parts marked by " ◉ " are not always kept in stock. Their delivery time may be longer than usual or they may be unavailable.*

3.1 PACKING

Parts List

Mark	No.	Description	Parts No.
	1	Operating Instructions	256055
	2	RCA Cable Accessory Pack	255245
	3	Corner Pad Assy Bottom (HTP702-SW)	255349
	3	Corner Pad Assy Bottom (HTP202/302-SW)	255052
	4	Corner Pad Assy Top (HTP702-SW)	256878
	4	Corner Pad Assy Top (HTP202/302-SW)	256124
	5	Poly Bag (HTP702-SW)	255354
	5	Poly Bag (HTP202/302-SW)	255067
	6	Packing Case (HTP702-SW)	255334
	6	Packing Case (HTP202/302-SW)	255230

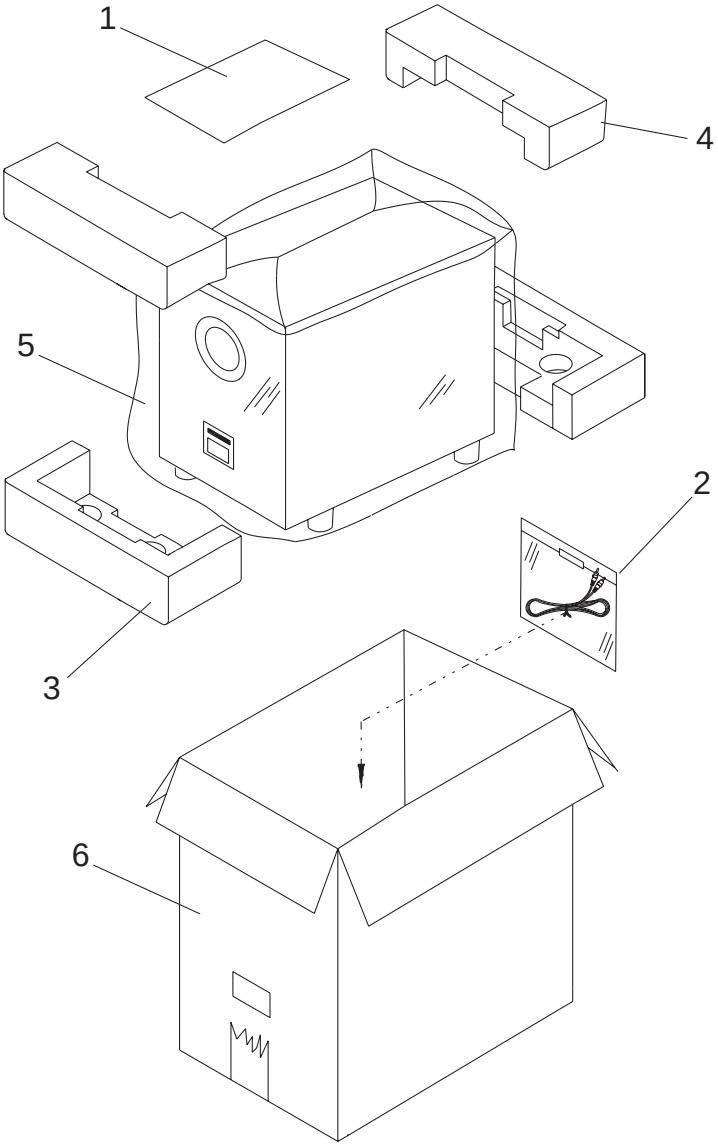

3.2 EXTERIOR SECTION

Parts List

Mark	No.	Description	Parts No.
NSP	1	Cabinet Enclosure (HTP702-SW)	255394
NSP	1	Cabinet Enclosure (HTP202/302-SW)	255285
NSP	2	Amplifier Assy	254797
NSP	3	Logo	255101
	4	Foot	255116
NSP	5	Port Tube, Paper	255136
NSP	6	Front Port Ring	254306
NSP	7	Rear Port Ring	254346
NSP	8	Label FTC Sticker	258942
NSP	9	UL-CUL Label	255270
	10	Polyswitch Assembly	255498
	11	Speaker (HTP702-SW)	25-58A/XL
	11	Speaker (HTP202/302-SW)	20-208A/XL
	12	Screw (for Amplifier & Speaker)	221904
	13	Screw (for Foot)	222539

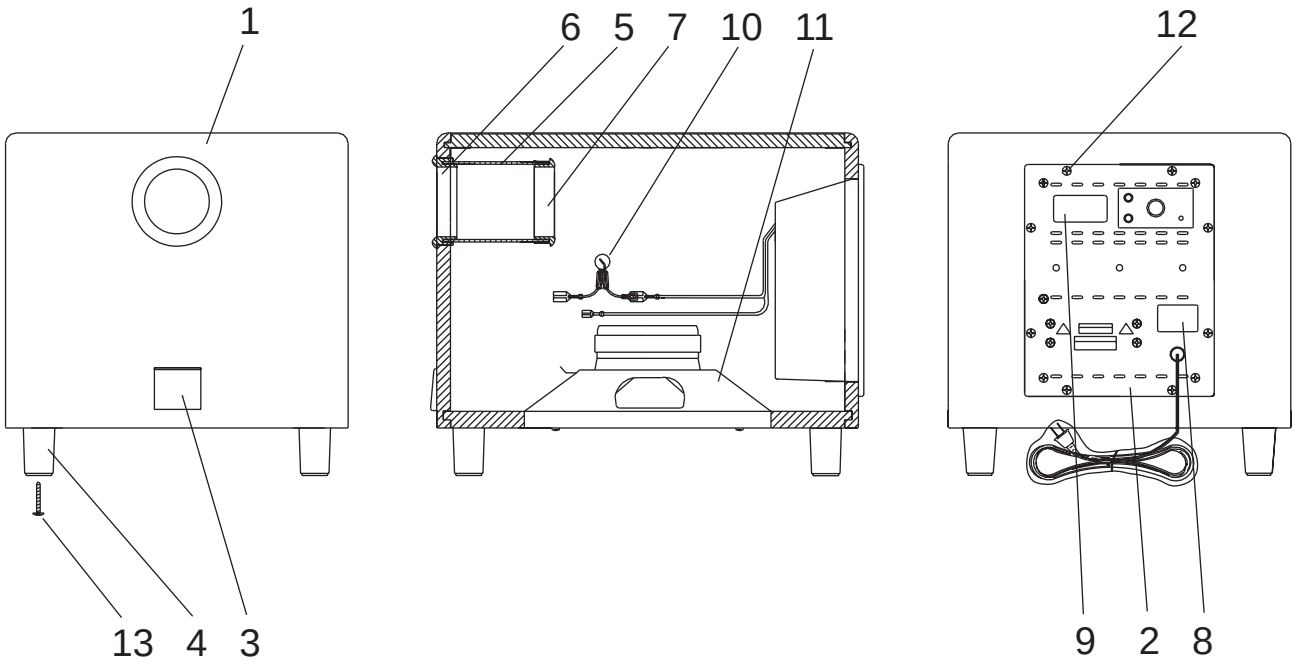

3.3 POWER AMP SECTION

Parts List

Mark	No.	Description	Parts No.
	1	2P Cord	044899
⚠	2	AC Cord	046947
	3	BRKT PCB C	077876
NSP		Cushion Gasket	078786
	4	Cushion Stopper	078519
	5	Deco Sheet (Large)	043143
	6	Deco Sheet (Small)	084846
	7	Heatsink Sub	045576
	8	Knob	072992
NSP		Label Caution	084934
		Cable Tie	080558

Mark	No.	Description	Parts No.
	9	Mold Case	080336
		Mold RCA Cap	080250
	10	Panel Rear Assy	043163
NSP	11	Power Amp PCB Section	084541
	12	Screw (3X10 BL)	075640
	13	Screw (4X10 BL)	075659
	14	Screw (M3X8 ZC)	075273
	15	Tr 2SA1635 (Q611, Q615)	084680
	16	Tr 2SC4008 (Q610, Q614)	084682
⚠	17	Trans Power	084759

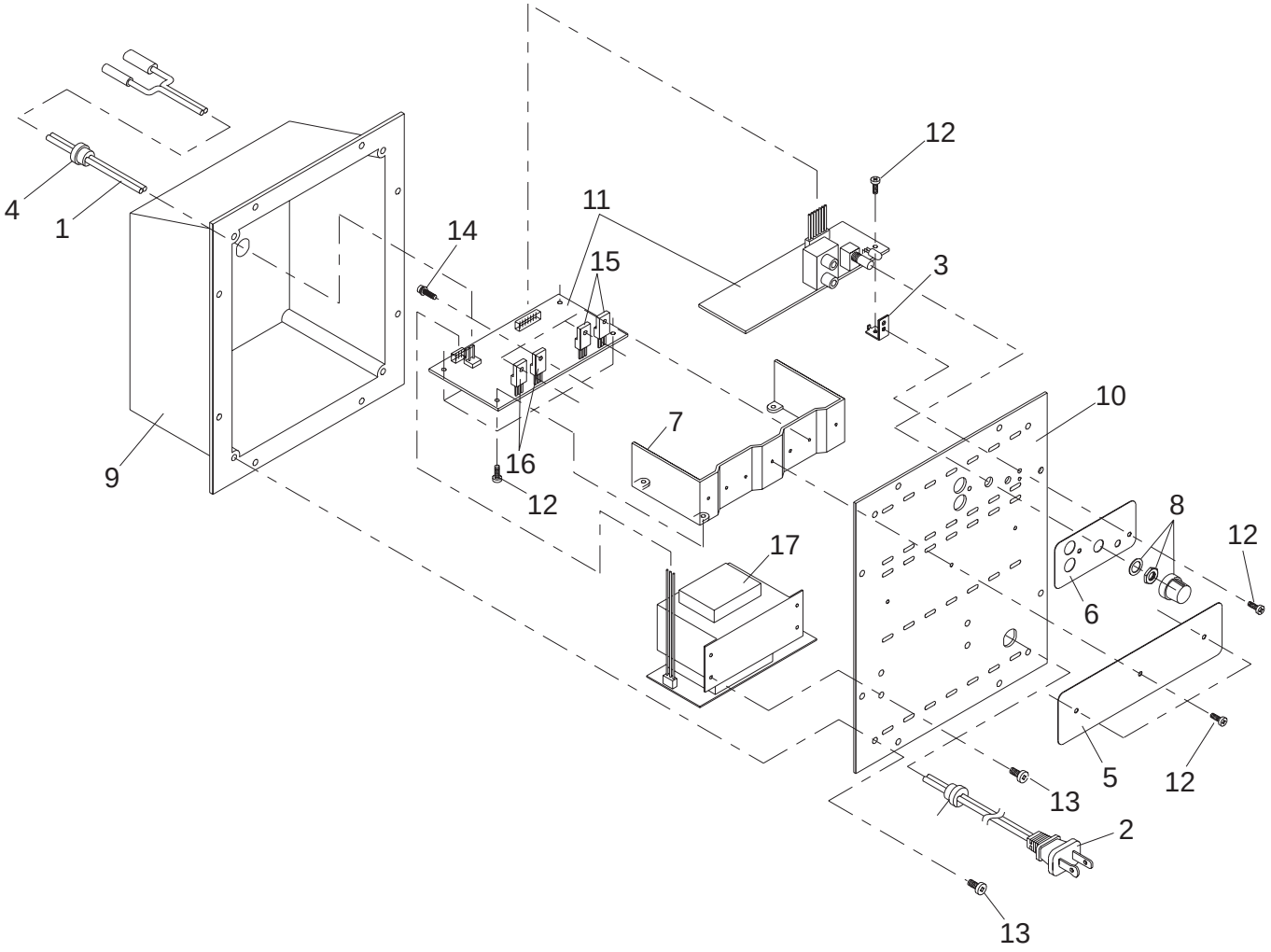

4. SCHEMATIC AND PCB CONNTCTION DIAGRAMS

NOTE FOR SCHEMATIC DIAGRAMS (Type 1A)

1. When ordering service parts, be sure to refer to "PARTS LIST of EXPLODED VIEWS" or "PCB PARTS LIST".

2. Since these are basic circuits, some parts of them or the values of some components may be changed for improvement.

3. RESISTORS:
Unit: k:kΩ, M:MΩ, or Ω unless otherwise noted.
Rated power: 1/4W, 1/6W, 1/8W, 1/10W unless otherwise noted.
Tolerance: (F): ±1%, (G): ±2%, (K): ±10%, (M): ±20% or ±5% unless otherwise noted.

4. CAPACITORS:
Unit: p:pF or μF unless otherwise noted.
Ratings: capacitor (μF)/voltage(V) unless othrewise noted.
Rated voltage: 50V except for electrolytic capacitors.

5. COILS:
Unit: m:mH or μH unless otherwise noted.

6. VOLTAGE AND CURRENT:
V : Signal voltage at rated output.
or ← V:
DC voltage (V) at no input signal unless otherwise noted.
Value in ( ) is DC voltage at rated power.
⇦ mA or ← mA:
DC current at no input signal unless otherwise noted.

7. OTHERS:
- ⊘ or ⊘ : Adjusting point.
- ◄ : Measurement point.
- The ⚠ mark found on some component parts indicates the importance of the safety factor of the parts. Therefore, when replacing, be sure to use parts of identical designation.

8. SCH-☐ ON THE SCHEMATIC DIAGRAM:
- SCH-☐ indicates the drawing number of the schematic dia gram. (SCH stands for schematic diagram.)

9. SWITCHES (Underline indicates switch position):
- MAIN + CONT. ASSY
  S501 : PHASE Rev / Norm
  S502 : AUTO POWER ON/OFF

NOTE FOR PCB DIAGRAMS

1. Partnumbers in PCB diagrams match those in the schematic diagrams.

2. A comparison between the main parts of PCB and schematic diagrams is shown below.

Symbol in PCB Diagrams	Symbol in Schematic Diagrams	Part Name
B C E	B C E B C E	Transistor
B C E	B C E B C E	Transistor with resistor
D G S	D G S D G S	Field effect transistor
		Resistor array
		3-terminal regulator

4.1 CIRCUIT DIAGRAM

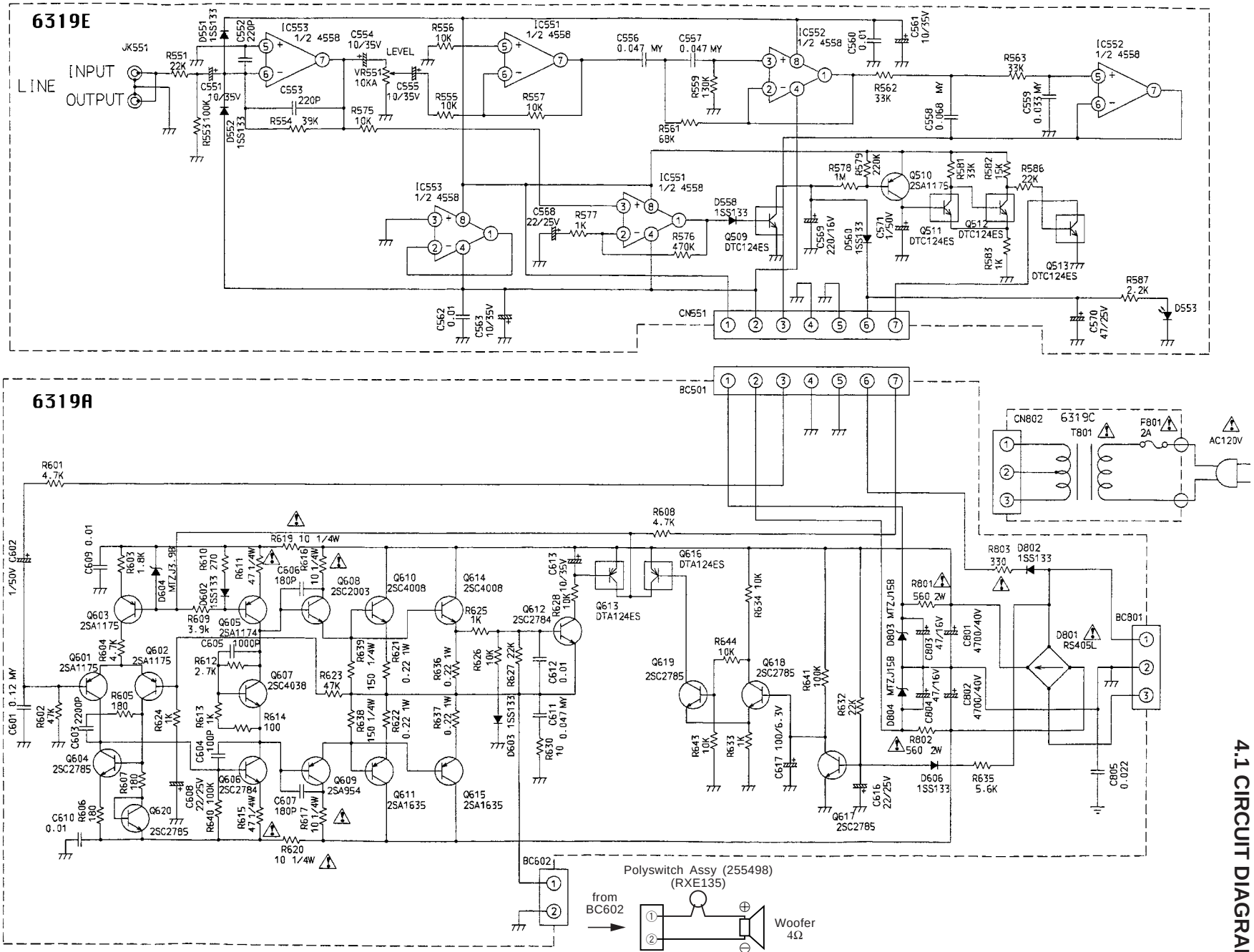

5. PCB PARTS LIST

NOTES:
- *Parts marked by "NSP" are generally unavailable because they are not in our Master Spare Parts List.*
- *The ⚠ mark found on some component parts indicates the importance of the safety factor of the part. Therefore, when replacing, be sure to use parts of identical designation.*
- *Parts marked by "◉" are not always kept in stock. Their delivery time may be longer than usual or they may be unavailable.*

■ PCB PARTS LIST (HTP702-SW, HTP202/302-SW)

POWER AMP PCB SECTION

SEMICONDUCTORS

Mark	No.	Description	Part No.
	IC551, IC552, IC553	IC NJM4558D	070140
	Q609	Tr 2SA954 LM	068579
	Q605	Tr 2SA1174 FP T	068608
	Q510, Q601, Q602, Q603	Tr 2SA1175 KEF T	068611
	Q608	Tr 2SC2003 LM	068754
	Q606, Q612	Tr 2SC2784 EF T	068804
	Q604, Q617, Q618, Q619, Q620	Tr 2SC2785 KEF T	068806
	Q607	Tr 2SC4038 R TL2	068874
	Q613, Q616	Tr DTA124ESA T	069250
	Q509, Q511, Q512, Q513	Tr DTC124ESA T	069297
	D604	ZD MTZ J 3.9B T	069069
	D803, D804	ZD MTZ15B T	069184
	D551, D552, D558, D560, D602, D603, D606, D802	D 1SS133 T-77	069460
⚠	D801	D RS405L-B41	069605
	D553	LED BL-B5134 RED	069823

CAPACITORS

Mark	No.	Description	Part No.
	C601	Film 50V 124K T	065026
	C559	Film 50V 333J T	065092
	C556, C557	Film 50V 473J T	065118
	C611	Film 50V 473K T	065123
	C558	Film 50V 683J T	065141
	C605	Ceramic 50V 102K T	065385
	C552, C553	Ceramic 50V 221K T	065404
	C603	Ceramic 50V 222K T	065407
	C560, C562, C609, C610, C612	Ceramic 50V 103Z T	065452
	C805	Ceramic 50V 223Z T	065457
	C604	Ceramic 500V 101K	065699
	C606, C607	Ceramic 500V 181K	065732
	C551, C554, C555, C561, C563, C613	Electrolyc 35V 100M T	066288
	C617	Electrolyc 6.3V 101M T	066296
	C571, C602	Electrolyc 50V 108M T	066329
	C568, C608	Electrolyc 25V 220M T	066347
	C616	Electrolyc 35V 220M T	066350
	C569	Electrolyc 16V 221M T	066361
	C803, C804	Electrolyc 16V 470M T	066424
	C570	Electrolyc 25V 470M T	066428
	C801, C802	Electrolyc 40V 472M D18	084663

RESISTORS

Mark	No.	Description	Part No.
	JA, JPLR, R569, R570	MetalR 16Z 0 T26A	067057
	R614	CarbonR H 1/6W 101J T	067065
	R577, R583, R613, R624, R625, R633	CarbonR H 1/6W 102J T	067069
	R555, R556, R557, R575, R626, R628, R634, R643, R644	CarbonR H 1/6W 103J T	067074
	R553, R640, R641	CarbonR H 1/6W 104J T	067079
	R578	CarbonR H 1/6W 105J T	067083
	R559	CarbonR H 1/6W 134J T	067106
	R582	CarbonR H 1/6W 153J T	067119
	R605, R606, R607	CarbonR H 1/6W 181J T	067129
	R603	CarbonR H 1/6W 182J T	067132
	R587	CarbonR H 1/6W 222J T	067155
	R551, R586, R627, R632	CarbonR H 1/6W 223J T	067160
	R579	CarbonR H 1/6W 224J T	067163
	R610	CarbonR H 1/6W 271J T	067175
	R612	CarbonR H 1/6W 272J T	067179
	R562, R563, R581	CarbonR H 1/6W 333J T	067207
	R609	CarbonR H 1/6W 392J T	067223
	R554	CarbonR H 1/6W 393J T	067225
	R601, R604, R608	CarbonR H 1/6W 472J T	067243
	R602, R623	CarbonR H 1/6W 473J T	067248
	R576	CarbonR H 1/6W 474J T	067252
	R635	CarbonR H 1/6W 562J T	067269
	R561	CarbonR H 1/6W 683J T	067297
⚠	R617	CarbonR FS 1/4W 100J	067381
⚠	R616, R619, R620	CarbonR FS 1/4W 100J S	067384
	R630	CarbonR FS 1/4W 100J S	067384
	R638, R639	CarbonR FS 1/4W 151T S	067407
⚠	R803	CarbonR FS 1/4W 331J S	067439
⚠	R611, R615	CarbonR FS 1/4W 470J S	067450
	R621, R622, R636, R637	MetalR RSF 1W 229J S	068010
⚠	R801, R802	MetalR RSF 2W 561J	068053
	VR551	VR 10kW A	084709

OTHERS

Mark	No.	Description	Part No.
	Misc	064821	
	Fuse Socket	074193	
⚠	F801	Fuse 250V 2A	075066
	Screw (3X10 BL)	075640	
	CN551	7P Cord	077057
	CN802	3P Cord	077589
	BC801	3P Connector	081465
	BC501	7P Connector	081533
	BC602	2P Connector	081661
	JK551	2P RCA Jack	084749
	PCB 6319-20	084960	

6. PANEL FACILITIES

REAR SECTION

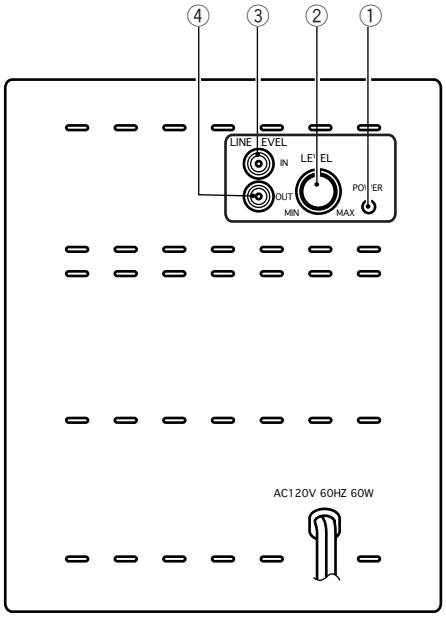

If the output of the receiver connected to this unit is high or if the output has a low range boosted by the Bass control, Bass boost, or other means, there may be some sound distortion even if the level of the unit is lowered. In this case, lower the output level (Volume, Bass control, Bass boost) on the receiver side.

① POWER indicator

Illuminates **RED** when the power is being supplied.

② Subwoofer LEVEL knob

Volume of subwoofer is adjusted with this knob. Turn this knob clockwise to raise the level.

÷ Starting with “MIN“, turn this knob and raise the volume slowly. If the unit is turned on with the volume set too high, it could cause hearing and/or speaker damage. Do not turn the volume up excessively high. The low frequency sound is apt to be raised too high since it is less disturbing and harder to detect than high frequencies. Caution must be taken here since the amplifier and speaker of the HTP702-SW, HTP202/302-SW will be clipped when the output of the amplifier or receiver is increased with the subwoofer level set to “MAX“.

③ Subwoofer input terminal (LINE LEVEL INPUT)

Connect SUBWOOFER OUTPUT terminal of the receiver to this terminal with the accessory RCA cord.

④ Subwoofer output terminal (LINE LEVEL OUTPUT)

Used for connecting an additional subwoofer to the system. Connect this terminal to the SUBWOOFER INPUT terminal of another subwoofer.

7. SPECIFICATIONS

	HTP202/302-SW	HTP702-SW
Cabinet	A floor, bass-reflex type, with a built-in amplifier having a PVC-sheet finishing with a wood pattern.	A floor, bass-reflex type, with a built-in amplifier having a PVC-sheet finishing with a wood pattern.
Speaker	20 cm (8 inch)	25 cm (10 inch)
Power Amplifier	Continuous Average Power Output is 50 Watts* min, at 4 ohms from 30 Hertz to 200 Hertz with no more than 1%** total harmonic distortion.	Continuous Average Power Output is 50 Watts* min, at 4 ohms from 30 Hertz to 200 Hertz with no more than 1%** total harmonic distortion.
Input (Sensitivity at 200 Hz/impedance) *Line level input	50 mV / 10k ohms	50 mV / 10k ohms
Crossover Frequency	120 Hz	120 Hz
Outline Dimension (W x H x D)	250 x 297 x 360 mm 9-13/16 x 11-11/16 x 14-3/16 inch	325 x 327 x 410 mm 12-13/16 x 12-7/8 x 16-1/8 inch
Weight	7.5 kg (16lb 8 oz)	9.1 kg (20lb)
Power Requirements	120 VAC, 60 Hz	120 VAC, 60 Hz
Power Consumption	60 W	60 W
Accessories	RCA cord (10ft.) x 1 Operating instructions x 1	RCA cord (10ft.) x 1 Operating instructions x 1

Note: *Specifications and design subject to possible modification without notice due to improvements.*

* *Measured pursuant to the Federal Trade Commission's Trade Regulation rule on Power Output Claims for Amplifiers.*
** *Measured by Audio Spectrum Analyzer.*

NOTES